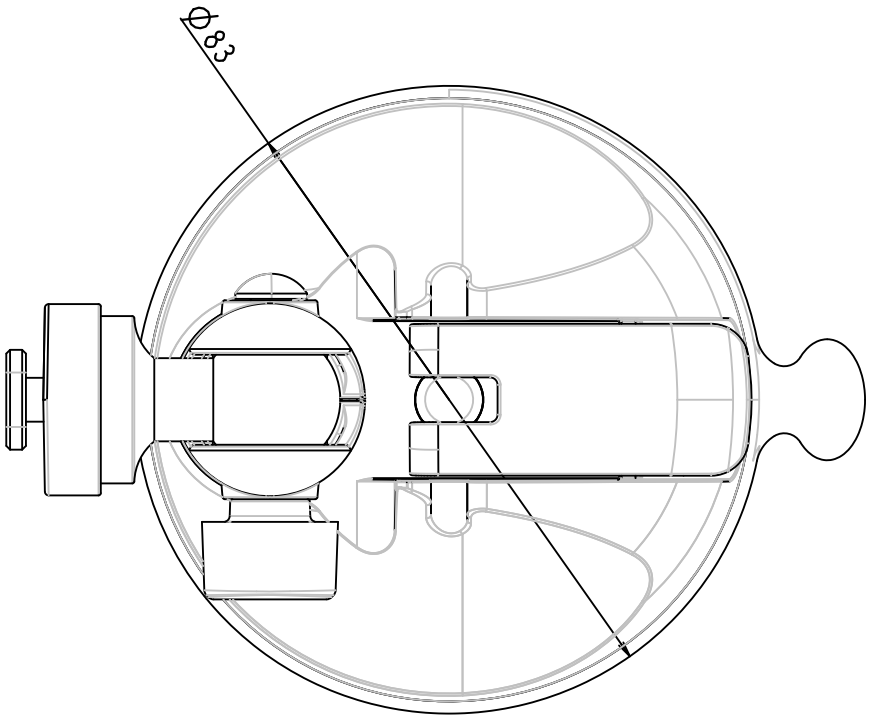
Ø83

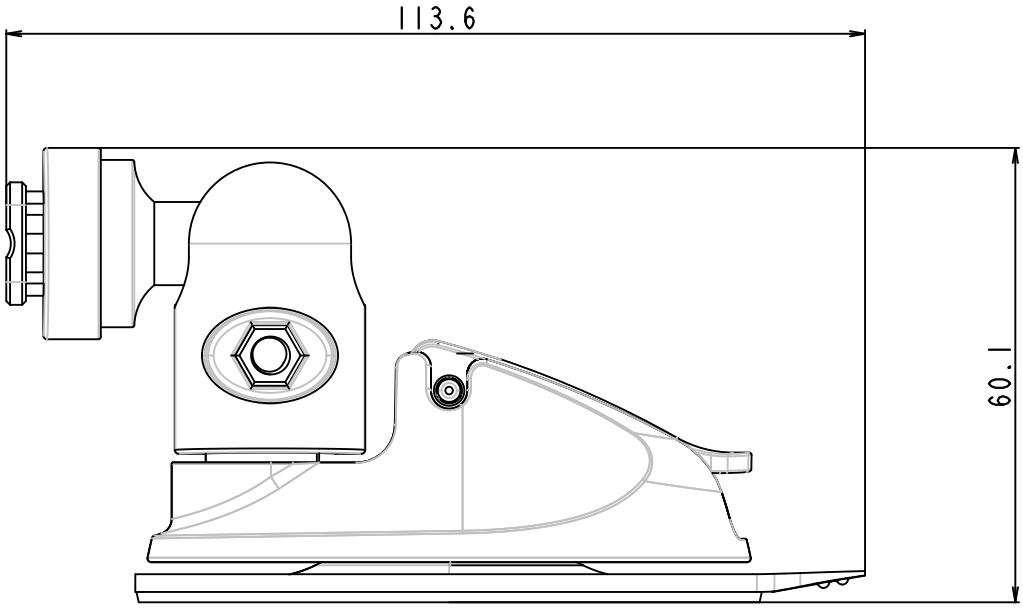
113.6
60.1